MESA SEMICIRCULAR GRANDE

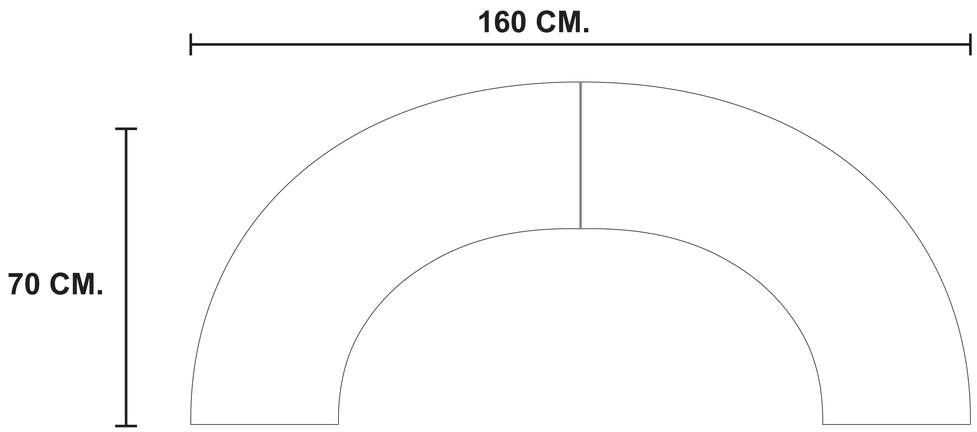
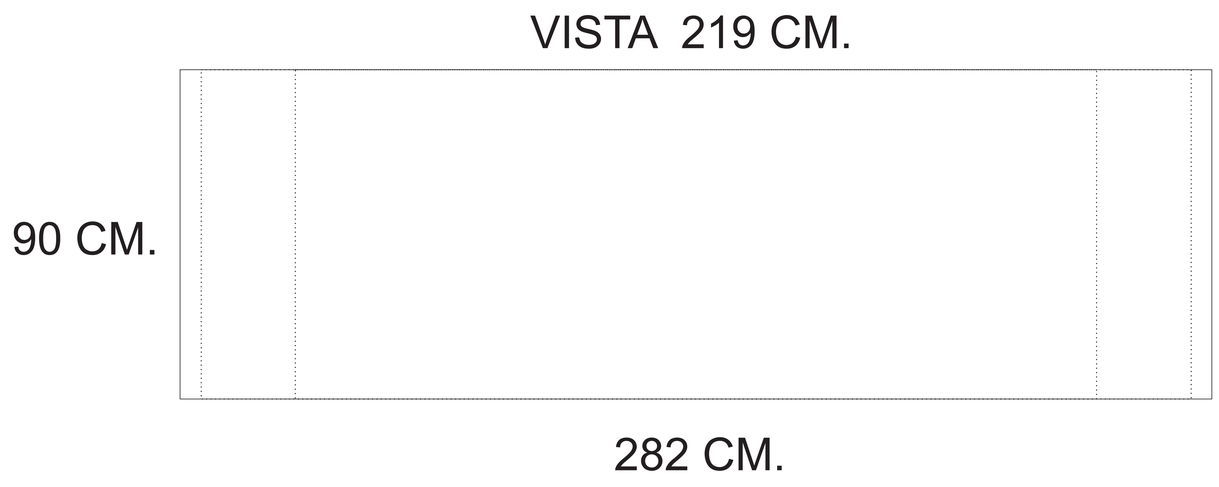
4 MODULOS